PAR
TAPS

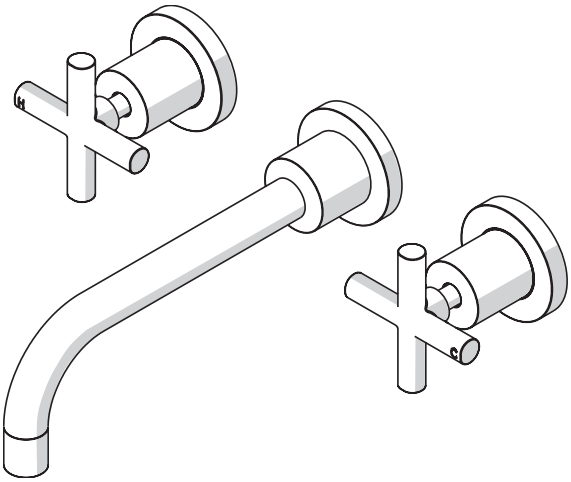

Ceramic Disc Retrofit Wall Tapware

Rough in Guide & Installation Guide

Ver 26.2

Important Information

Prior to Installation:

- All instructions serve as a guide only and must be installed by a licensed plumber in accordance with AS/NZS 3500.1. Installation carried out by unlicensed individuals will void all warranties.
- Supply lines must be flushed prior to installation to remove any foreign matter.
- All products are suitable for use with most instantaneous hot water heaters, however are not compatible with gravity-fed water systems.

Water Pressure & Temperature:

This Par Taps products are to be installed by a Licensed Plumber in accordance with AS/NZS 3500.1

Maximum Water Temperature — — — — — — — — — — 65° Celsius

Regulatory Maximum Water Pressure — — — — — — — — 500kPa

Note: In areas where the recommended maximum water pressure is exceeded, pressure-limiting valves must be installed.

Retrofit Wall Tapware Sets Range

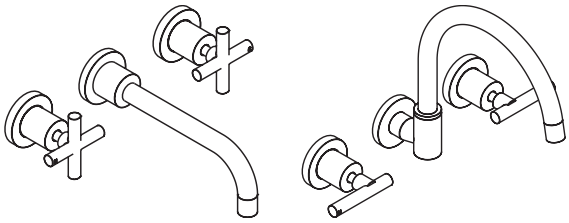

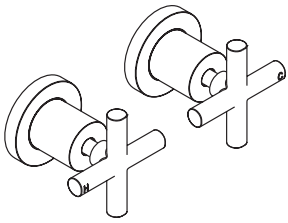

3 PIECE SET

Forme / Lever
Portsea / Lever
Ari
Tudor / Lever
Bell / Lever

TOP ASSEMBLIES

Forme / Lever
Portsea / Lever
Ari
Tudor / Lever
Bell / Lever

Rough-in Set Up

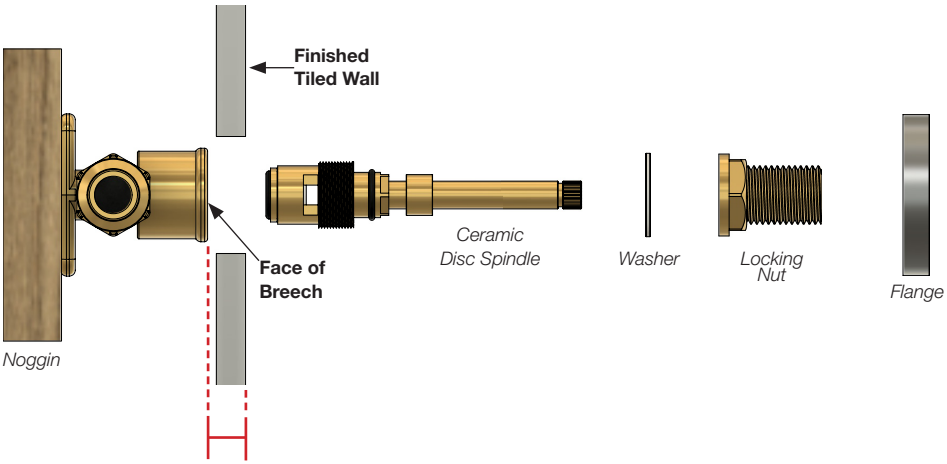

0-12mm: Standard Set - Face of Breech to Finished Tiled Wall

12-22mm: Optional Kit Required - G11.021.1 Universal Wall Spline Extension Kit

Handle Direction

Cross Handle

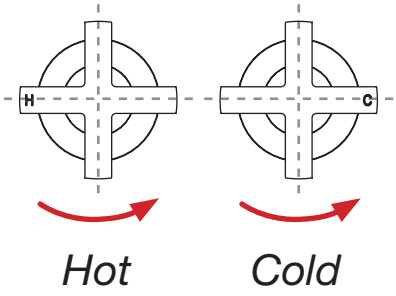

Safety Note:
Cross handles are **Contra Rotation**
The hot handle is turned anti-clockwise
The cold handle is turned anti-clockwise

Lever Handle

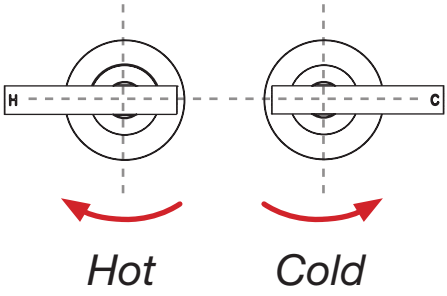

Safety Note:
Lever handles are **Contra Rotation**
The hot handle is turned clockwise
The cold handle is turned counter-clockwise

Wall Basin / Bath Sets

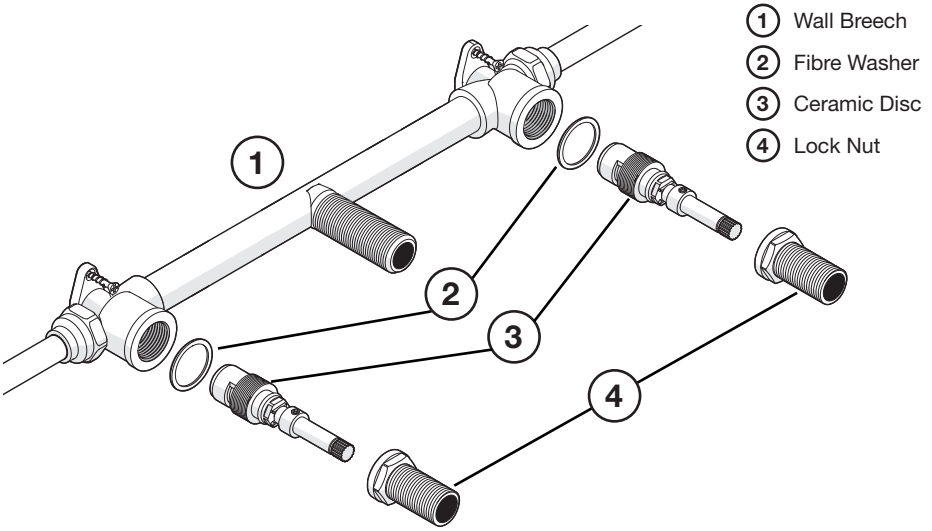

1. **Prior to installing ceramic disc assembly make sure the seat surface is clean and smooth otherwise reseat and recheck. Also ensure that lines have been flushed.**

   Ensure that the hot and cold indicators located on the bottom of the Ceramic Disc Assembly (3) are placed in the corresponding side of the breech.

2. Insert ceramic disc assembly (3) into Wall breech. Tighten ceramic disc assembly (3) firmly using a 14mm Deep tube socket (not supplied). Then place the fibre washer (2) over the ceramic disc assembly (3) and onto the face of the Wall breech (1).

   Align handle. Please refer to Fig 1 below.

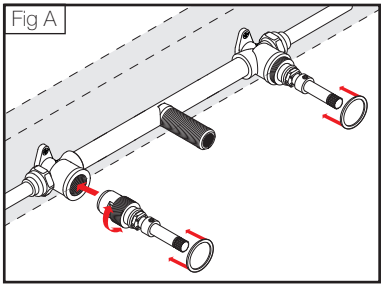

Handle Alignment

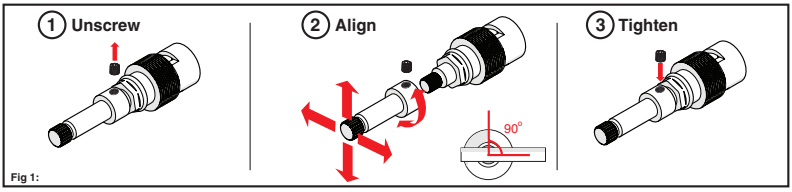

Firstly ensure that the disc is in the closed position and then fit handle to align.

*Fig 1: To align the handle, loosen grub screw from the extension using 2mm Allen key, then rotate the position of the extension and ceramic disc cartridge until the desired handle position is achieved.

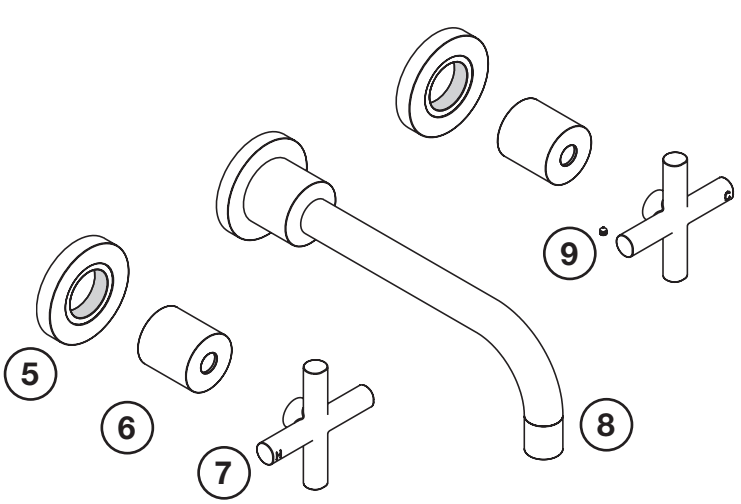

5 Circle Plate
6 Dome
7 Handle
8 Outlet
9 Grub Screw

3. After the handle has been aligned, screw the Brass lock nut (4) onto the ceramic disc assembly (3) and tighten firmly using a 25mm deep tube socket.

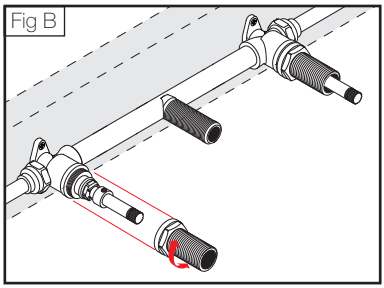

4. Slide the Circle Backplate (5) over the ceramic disc assembly (3) and screw in the outlet (8) onto the finished wall.

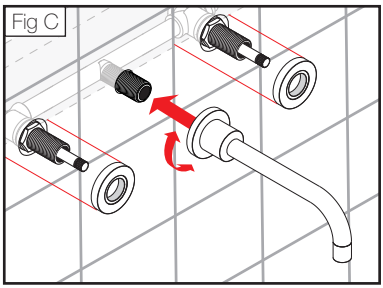

5. Install the domes (6) to the backplate (5) to wall surface to secure in place.

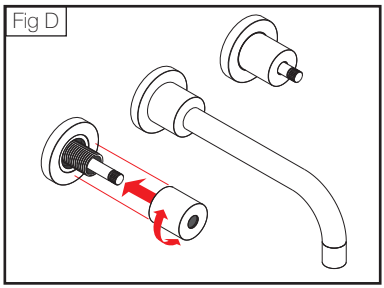

6. Firmly push the handles (7) to the main body (Fig E). Tighten the grub screw (9) to secure.

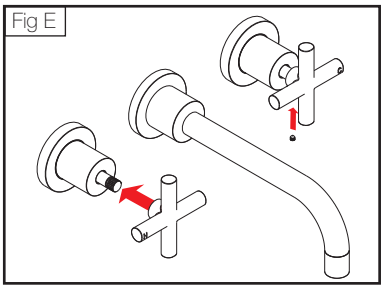

Please Note: In the diagrams above (Fig D & Fig E), for clarity the tile wall face has not been depicted.

Wall Sink / Spa Sets

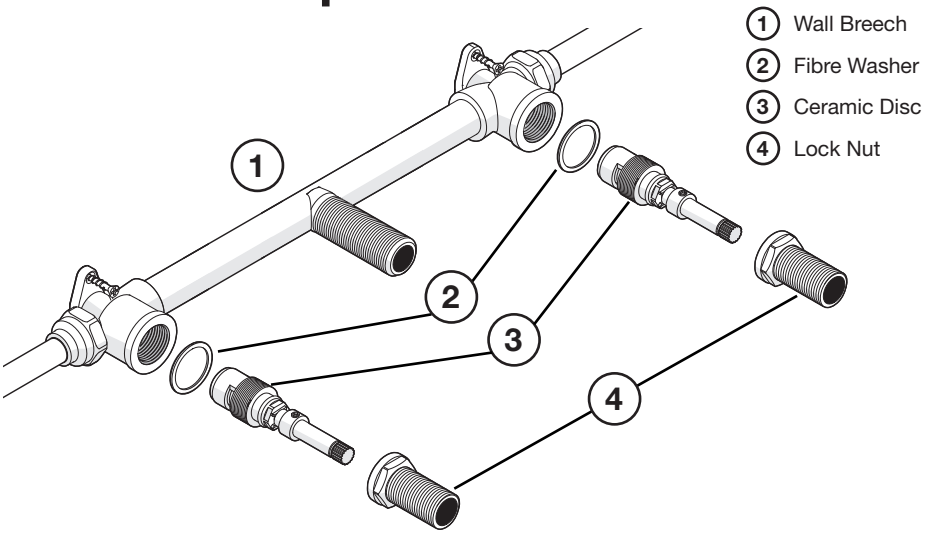

1. **Prior to installing ceramic disc assembly make sure the seat surface is clean and smooth otherwise reseat and recheck. Also ensure that lines have been flushed.**

   Ensure that the hot and cold indicators located on the bottom of the Ceramic Disc Assembly (3) are placed in the corresponding side of the breech.

2. Insert ceramic disc assembly (3) into Wall breech. Tighten ceramic disc assembly (3) firmly using a 14mm Deep tube socket (not supplied). Then place the fibre washer (2) over the ceramic disc assembly (3) and onto the face of the Wall breech (1).

   Align handle. Please refer to Fig 1 below.

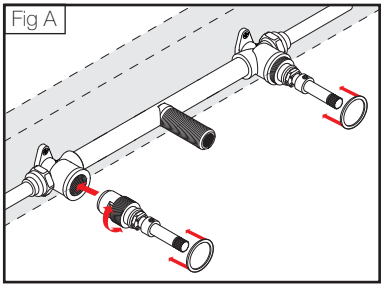

Handle Alignment

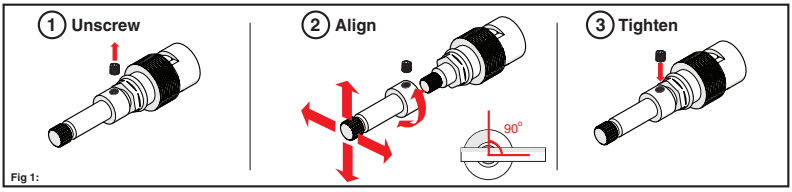

Firstly ensure that the disc is in the closed position and then fit handle to align.

*Fig 1: To align the handle, loosen grub screw from the extension using 2mm Allen key, then rotate the position of the extension and ceramic disc cartridge until the desired handle position is achieved.

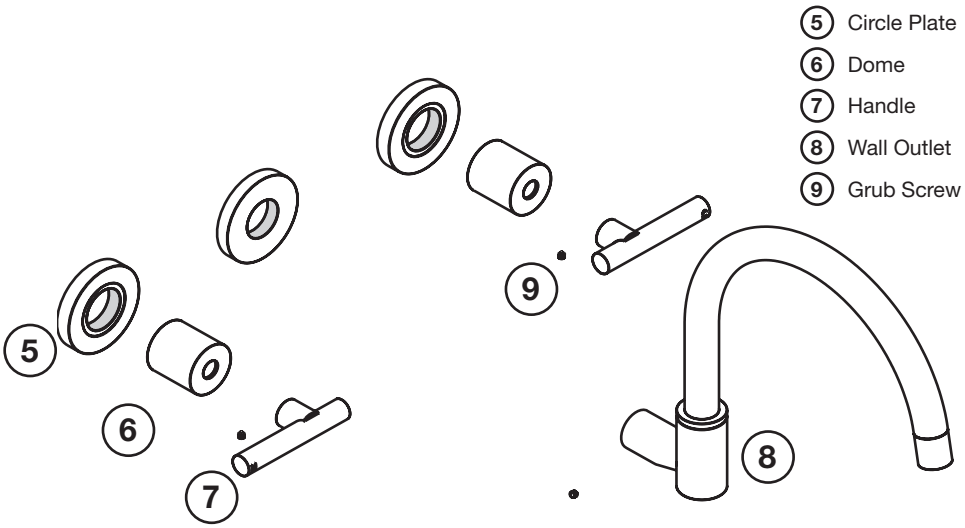

3. After the handle has been aligned, screw the Brass lock nut (4) onto the ceramic disc assembly (3) and tighten firmly using a 25mm deep tube socket.

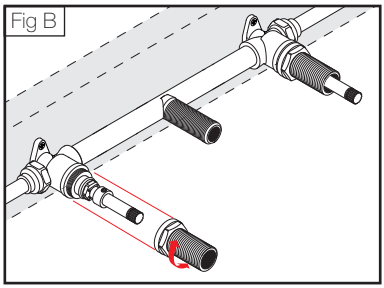

4. Disassemble the Wall Outet (8) by first unscrewing the grub screw (9) with an Allen key from the elbow arm. Then pull out the outlet from the elbow arm

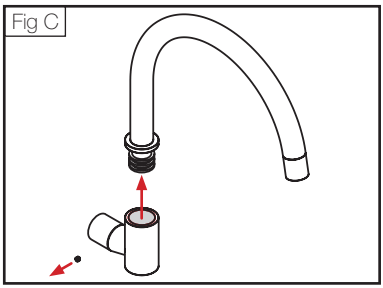

5. Assemble the circle plate (5), dome (6) and handle (7) to the ceramic disc assembly on the wall and tighten up with grub screw (9). Screw in the elbow arm (8) to the outlet

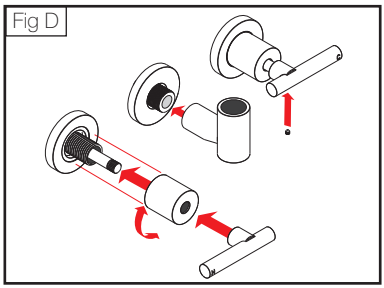

6. Re-insert the outlet back into the elbow arm (8) and tighten the grub screw (9). Ensure the elbow arm and outlet (8) are fitted firmly and able to swivel

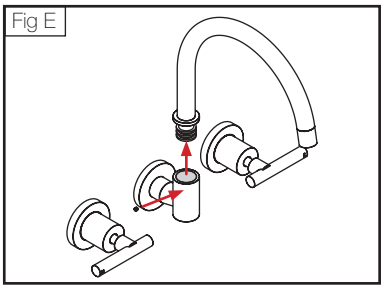

Please Note: In the diagrams above (Fig D & Fig E), for clarity the tile wall face has not been depicted.



PAR

TAPS



www.partaps.com



/ParTapsPtyLtd



@par_taps