PAR
TAPS

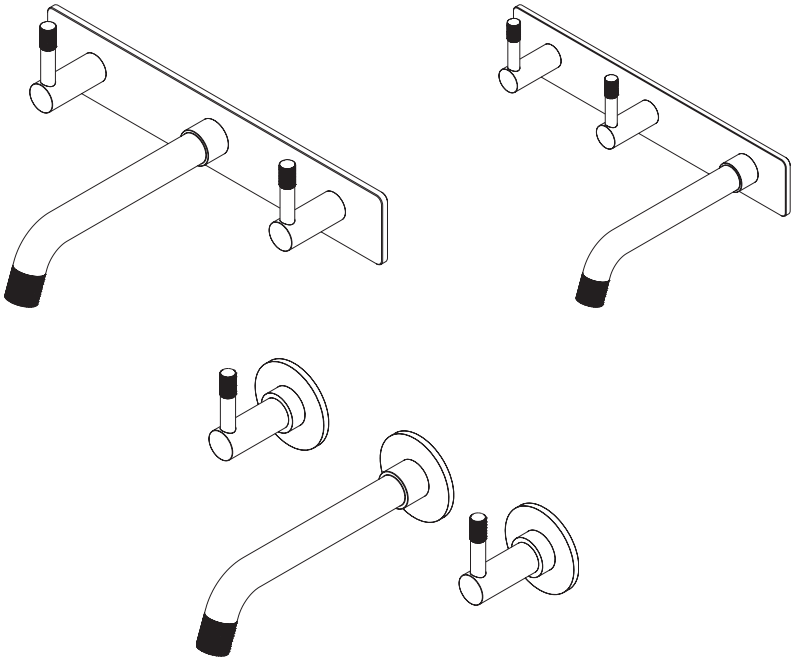

Elm Wall Basin & Bath Tapware

Rough in Guide & Installation Guide

Ver 26.2

Important Information

Prior to Installation:

- All instructions serve as a guide only and must be installed by a licensed plumber in accordance with AS/NZS 3500.1. Installation carried out by unlicensed individuals will void all warranties.
- Supply lines must be flushed prior to installation to remove any foreign matter.
- All products are suitable for use with most instantaneous hot water heaters, however are not compatible with gravity-fed water systems.

Water Pressure & Temperature:

This Par Taps products are to be installed by a Licensed Plumber in accordance with AS/NZS 3500.1

Maximum Water Temperature — — — — — — — — — — 65° Celsius

Regulatory Maximum Water Pressure — — — — — — — — 500kPa

Note: In areas where the recommended maximum water pressure is exceeded, pressure-limiting valves must be installed.

Wall Tapware Sets Range

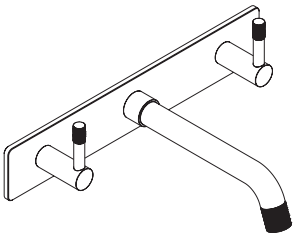

WALL SET ON PLATE

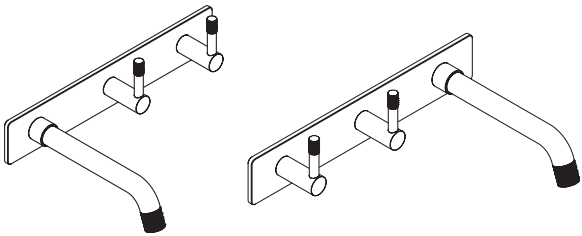

WALL SET ON PLATE - OFFSET

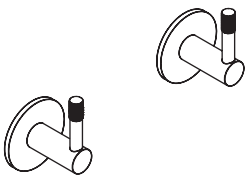

TOP ASSEMBLIES

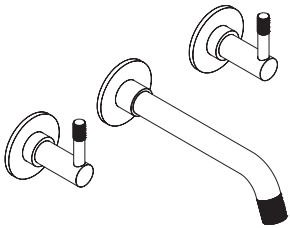

3 PIECE WALL SETS

Rough-in Set Up

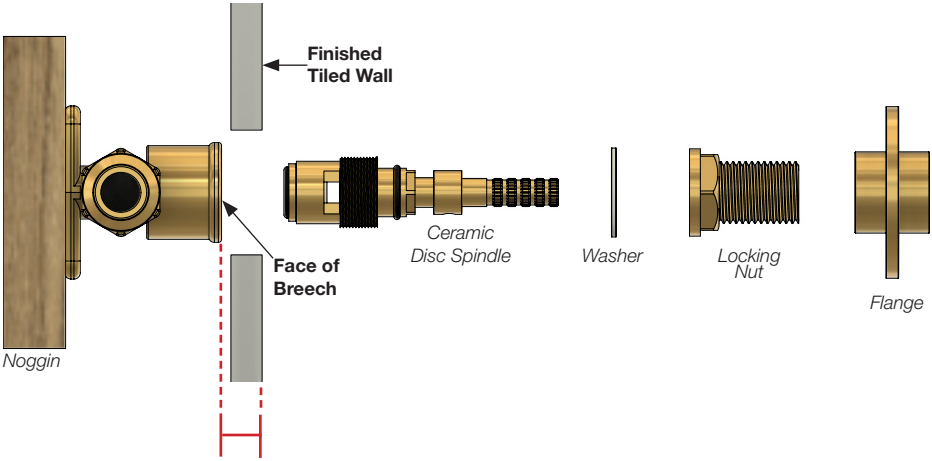

25-32mm: Standard Set - Face of Breech to Finished Tiled Wall

33-39mm: Optional Kit Required - G11.061.1 Elm Large Locking Nut Kit

Handle Direction

Normal

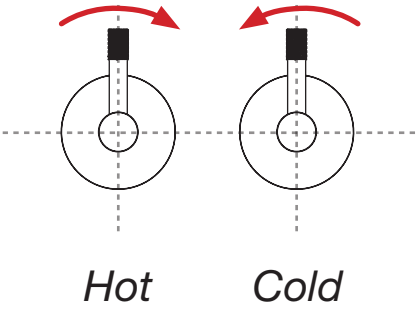

Safety Note:
Elm spindles are **Contra Rotation**
The hot handle is turned clockwise
The cold handle is turned counter-clockwise

Offset

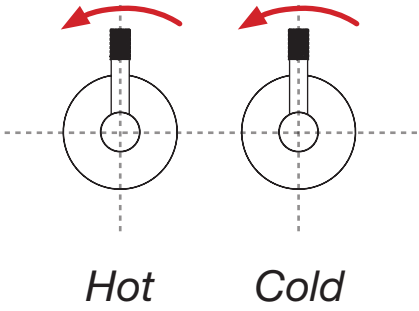

Safety Note:
Elm Offset spindles are **Counter-clockwise Rotation**

Wall Sets

3 Piece

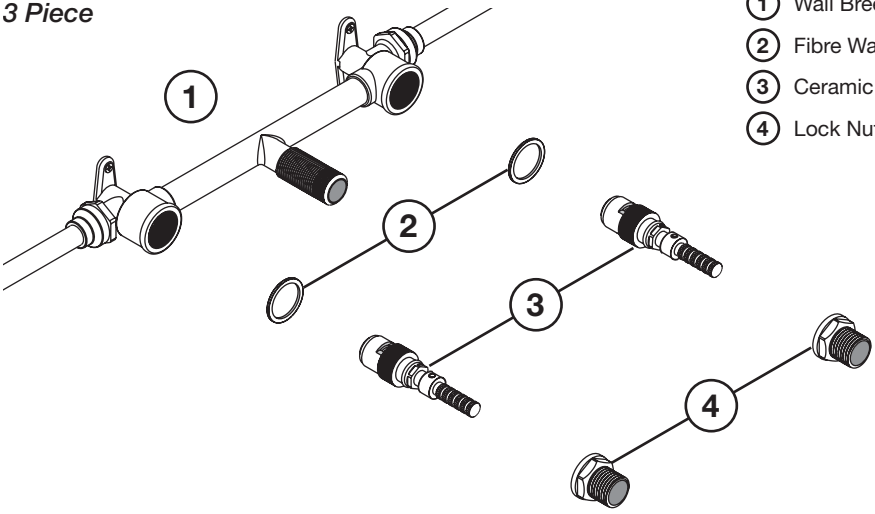

1. Wall Breech
2. Fibre Washer
3. Ceramic Disc
4. Lock Nut

1. **Prior to installing ceramic disc assembly make sure the seat surface is clean and smooth otherwise reseat and recheck. Also ensure that lines have been flushed.**

   Ensure that the hot and cold indicators located on the bottom of the Ceramic Disc Assembly (3) are placed in the corresponding side of the breech.

2. Insert ceramic disc assembly (3) into Wall breech. Tighten ceramic disc assembly (3) firmly using a 14mm Deep tube socket (not supplied). Then place the fibre washer (2) over the ceramic disc assembly (3) and onto the face of the Wall breech (1).

   Align handle. Please refer to Fig 1 below.

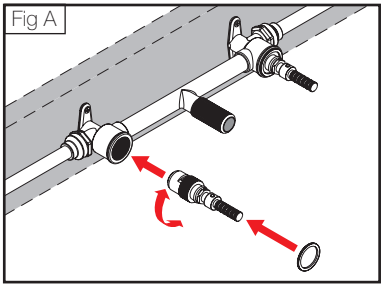

Handle Alignment for Lever Handles

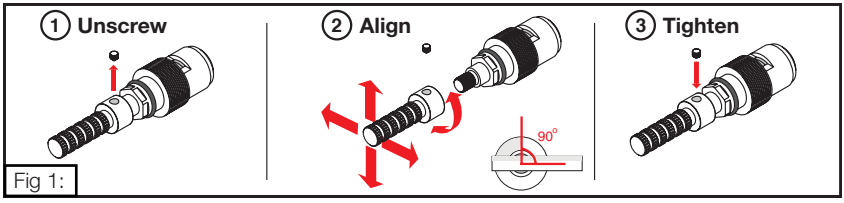

Firstly ensure that the disc is in the closed position and then fit handle to align.

*Fig 1: To align the handle, loosen grub screw from the extension using 2mm Allen key, then rotate the position of the extension and ceramic disc cartridge until the desired handle position is achieved.

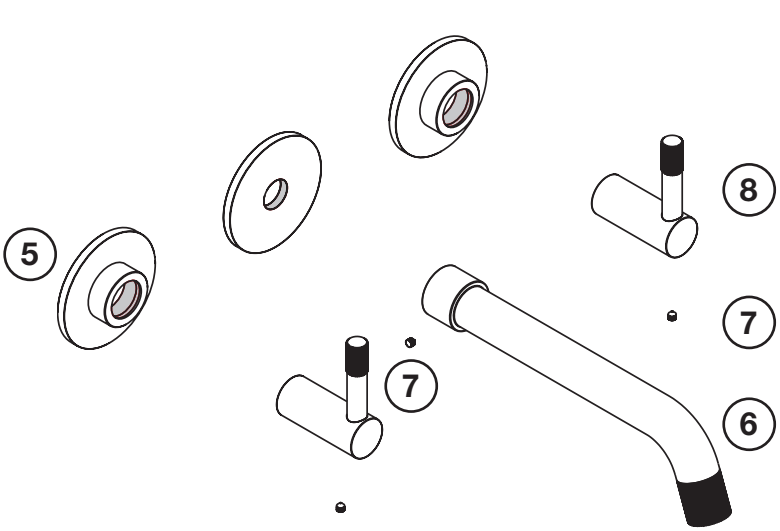

3. After the handle has been aligned, screw the brass lock nut (4) onto the ceramic disc assembly (3) and tighten firmly using a 25mm deep tube socket. Apply thread tape to the outlet male thread on the wall

Fig B

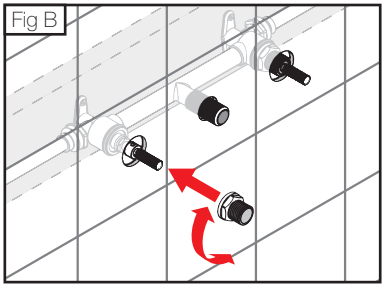

4. Trial fit the flange (5) and handle (8) over the ceramic disc assembly (3) onto the finished wall. If the spline or locknuts are too long, remove them, trim them to the required length, and then refit them

Fig C

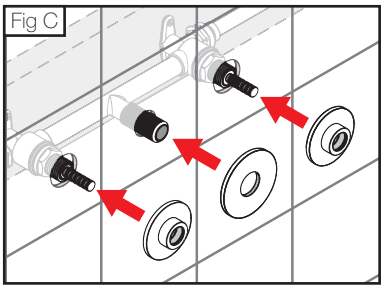

5. **DO NOT CUT DOWN THE SPLINES WHILST STILL IN THE BREECH ASSEMBLY**

Here is the illustrated example of trimming the spline

Fig D

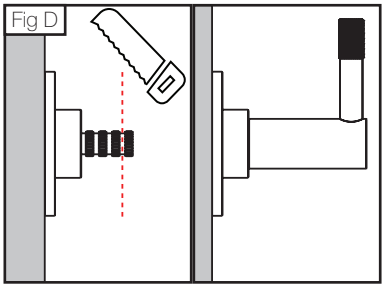

6. Attach the outlet (6) to the male thread by screwing it on. Next, slide the handles (8) onto the splines and secure them in place with the grub screw (7)

Fig E

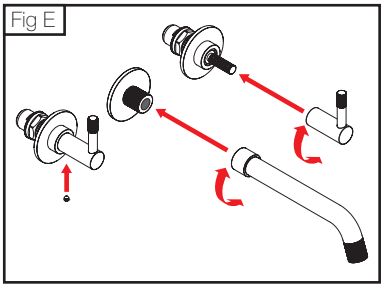

Please Note: In the diagrams above (Fig E), the tile wall face has not been depicted for clarity.

Wall Sets on Plate

Normal & Offset

1. Wall Breech
2. Fibre Washer
3. Ceramic Disc
4. Lock Nut

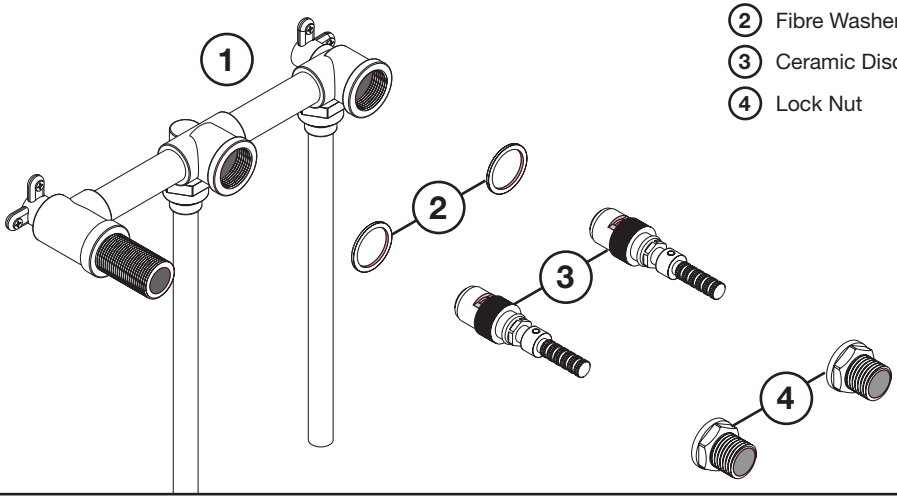

1. **Prior to installing ceramic disc assembly make sure the seat surface is clean and smooth otherwise reseat and recheck. Also ensure that lines have been flushed.**

   Ensure that the hot and cold indicators located on the bottom of the Ceramic Disc Assembly (3) are placed in the corresponding side of the breech.

2. Insert ceramic disc assembly (3) into Wall breech. Tighten ceramic disc assembly (3) firmly using a 14mm Deep tube socket (not supplied). Then place the fibre washer (2) over the ceramic disc assembly (3) and onto the face of the Wall breech (1).

   Align handle. Please refer to Fig 1 below.

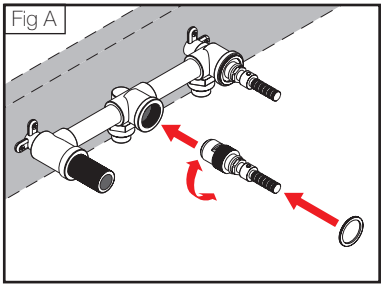

Handle Alignment for Lever Handles

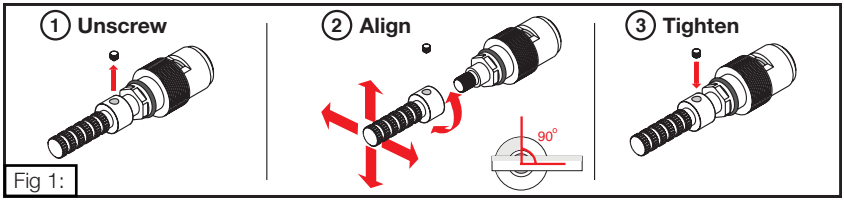

Firstly ensure that the disc is in the closed position and then fit handle to align.

*Fig 1: To align the handle, loosen grub screw from the extension using 2mm Allen key, then rotate the position of the extension and ceramic disc cartridge until the desired handle position is achieved.

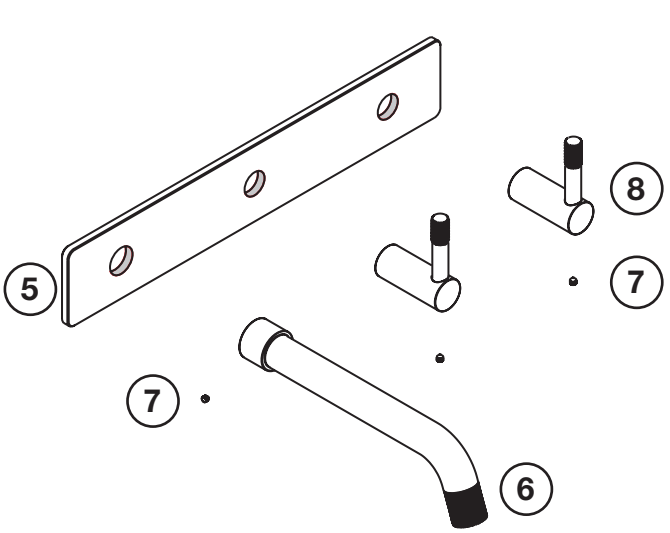

5. Backplate
6. Outlet
7. Grub Screw
8. Handle

3. After the handle has been aligned, screw the brass lock nut (4) onto the ceramic disc assembly (3) and tighten firmly using a 25mm deep tube socket. Apply thread tape to the outlet male thread on the wall

Fig B

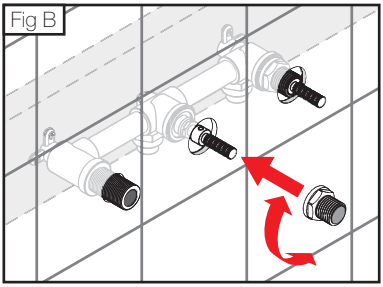

4. Trial fit the backplate (5) and handle (8) over the ceramic disc assembly (3) onto the finished wall. If the spline or locknuts are too long, remove them, trim them to the required length, and then refit them

Fig C

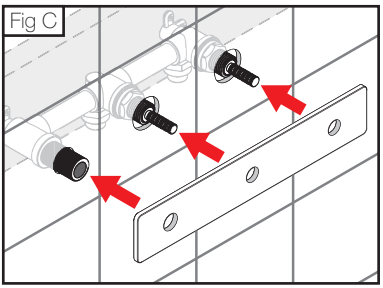

5. **DO NOT CUT DOWN THE SPLINES WHILST STILL IN THE BREECH ASSEMBLY**

Here is the illustrated example of trimming the spline

Fig D

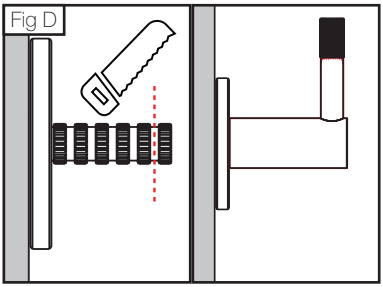

6. Attach the outlet (6) to the male thread by screwing it on. Next, slide the handles (8) onto the splines and secure them in place with the grub screw (7)

Fig E

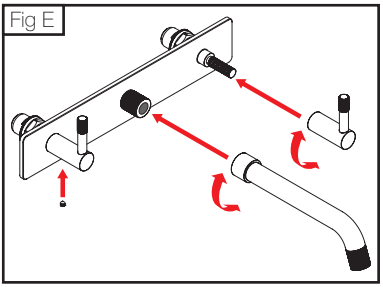

Please Note: In the diagrams above (Fig E), the tile wall face has not been depicted for clarity.



PAR

TAPS



www.partaps.com



/ParTapsPtyLtd



@par_taps