PAR
TAPS

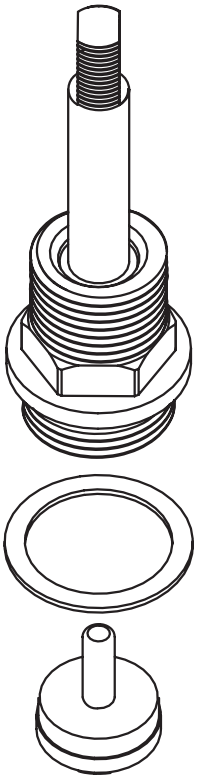

Jumper Valve

Installation Guide

Ver 26.2

Important Information

Prior to Installation:

- Please read these instructions completely.
- All instructions serve as a guide only and must be installed by a licensed plumber in accordance with AS/NZS 3500.1. Installation carried out by unlicensed individuals will void all warranties.
- Supply lines must be flushed prior to installation to remove any foreign matter.
- All products are suitable for use with most instantaneous hot water heaters, however are not compatible with gravity-fed water systems.

Water Pressure & Temperature:

This Par Taps products are to be installed by a Licensed Plumber in accordance with AS/NZS 3500.1

Maximum Water Temperature — — — — — — — — — — 65° Celsius

Regulatory Maximum Water Pressure — — — — — — — — 500kPa

Note: In areas where the recommended maximum water pressure is exceeded, pressure-limiting valves must be installed.

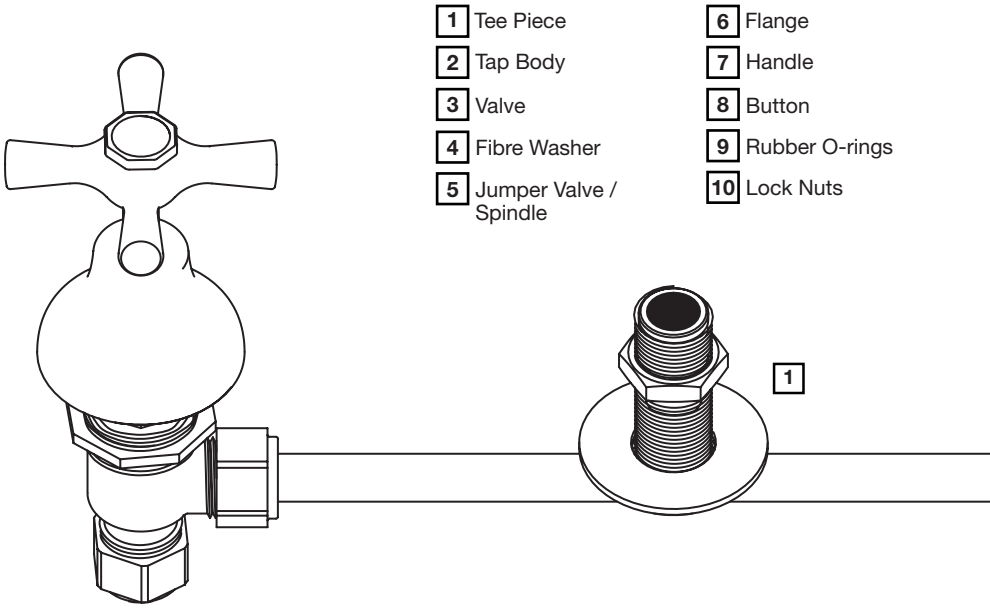

Product Depictions in this Guide For illustrative purposes, Bell products have been featured in this guide. There will be variations in appearance between this guide and products ranges, but installation remains identical.

Part List

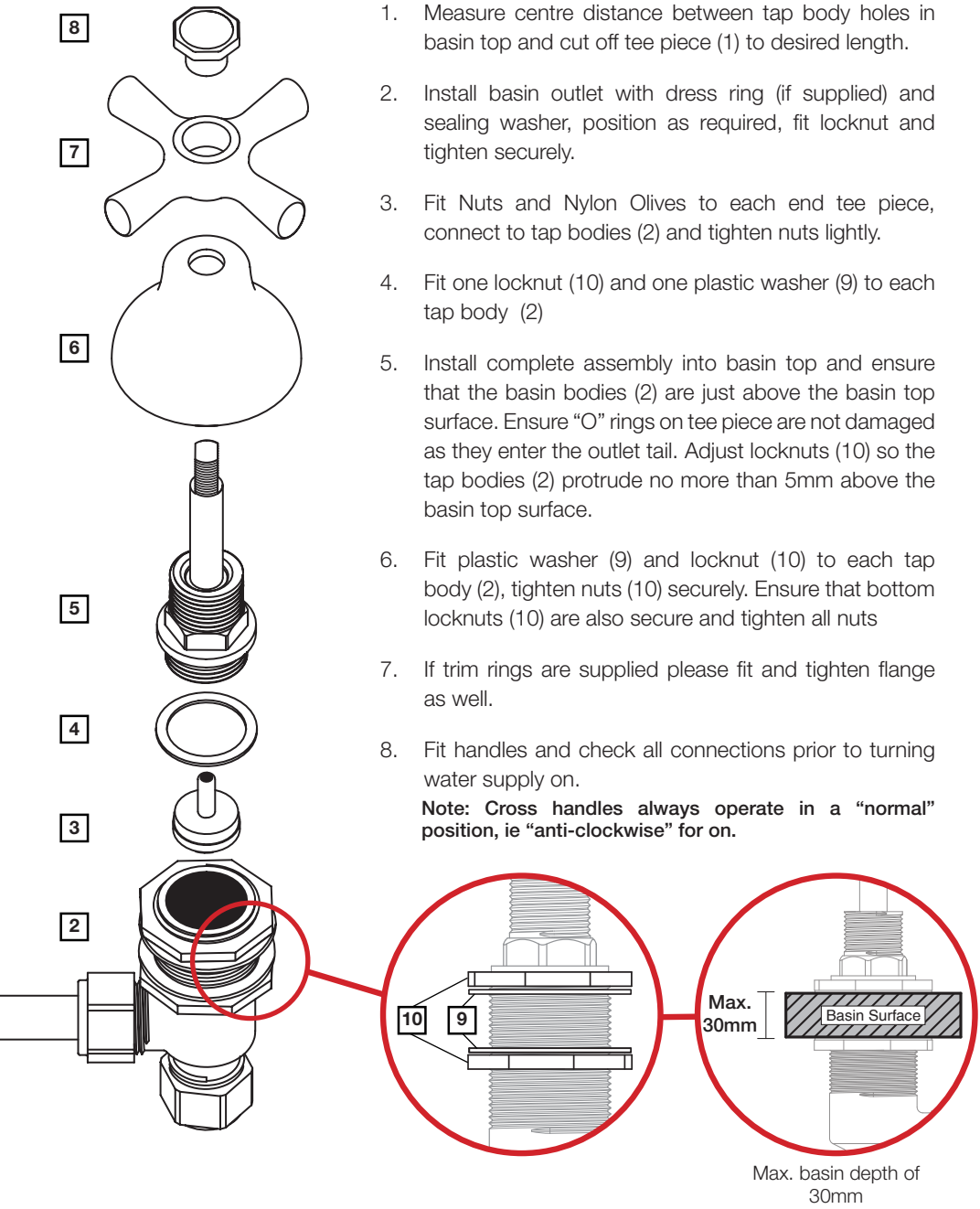

Max. basin depth of 30mm

1. Measure centre distance between tap body holes in basin top and cut off tee piece (1) to desired length.
2. Install basin outlet with dress ring (if supplied) and sealing washer, position as required, fit locknut and tighten securely.
3. Fit Nuts and Nylon Olives to each end tee piece, connect to tap bodies (2) and tighten nuts lightly.
4. Fit one locknut (10) and one plastic washer (9) to each tap body (2)
5. Install complete assembly into basin top and ensure that the basin bodies (2) are just above the basin top surface. Ensure “O” rings on tee piece are not damaged as they enter the outlet tail. Adjust locknuts (10) so the tap bodies (2) protrude no more than 5mm above the basin top surface.
6. Fit plastic washer (9) and locknut (10) to each tap body (2), tighten nuts (10) securely. Ensure that bottom locknuts (10) are also secure and tighten all nuts
7. If trim rings are supplied please fit and tighten flange as well.
8. Fit handles and check all connections prior to turning water supply on.

Note: Cross handles always operate in a “normal” position, ie “anti-clockwise” for on.



PAR

TAPS



www.partaps.com



/ParTapsPtyLtd



@par_taps