PAR
TAPS

Opus Hob Mixers Collection

Installation Guide

Ver 26.2

Important Information

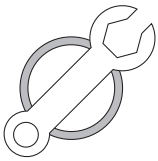

Prior to Installation:

- Please read these instructions completely.
- All instructions serve as a guide only and must be installed by a licensed plumber in accordance with AS/NZS 3500.1. Installation carried out by unlicensed individuals will void all warranties.
- Supply lines must be flushed prior to installation to remove any foreign matter.
- All products are suitable for use with most instantaneous hot water heaters, however are not compatible with gravity-fed water systems.

Water Pressure & Temperature:

This Par Taps products are to be installed by a Licensed Plumber in accordance with AS/NZS 3500.1

Maximum Water Temperature — — — — — — — — — — 65° Celsius

Regulatory Maximum Water Pressure — — — — — — — — 500kPa

Note: In areas where the recommended maximum water pressure is exceeded, pressure-limiting valves must be installed.

Page of Contents

Before Installation 3

Hob Progressive Mixer *Without Spacer* 4

Hob Progressive Mixer *With Spacer* 5

Hob Mixer Sets 6

Hob Mixer Pull Out Sets 8

Before Installtion

Fig A

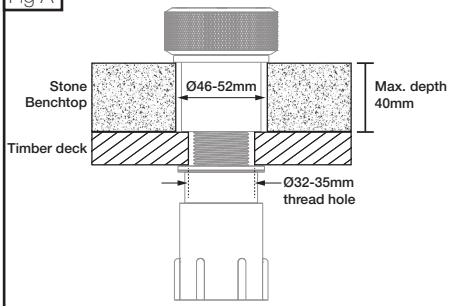

Fig B

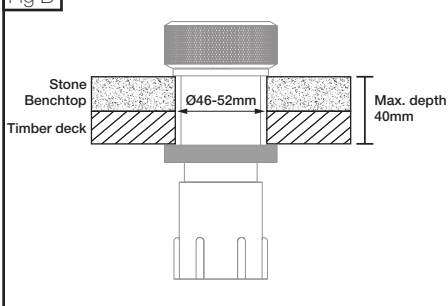

WITHOUT SPACER

Prior to installing, calculate the finished benchtop thickness to ensure the Hob Mixer Assembly will fit the final assembly.

Drill a 32mm (no larger than 35mm) in the timber deck. Mixer needs to sit on timber deck.

Stone or benchtop surface cut out should be 46-52mm to ensure mixer flange covers the hole after assembly.

A maximum of 40mm benchtop thickness to allow cover flange to fit mixer body.

450mm flexible inlet hoses are supplied

Recommended clearances indicated Fig A.

Hob Progressive Mixer without spacer will on page 4

WITH SPACER

Prior to installing, calculate the finished benchtop thickness to ensure the Hob Mixer Assembly will fit the final assembly.

Drill a 46mm (no larger than 52 mm) in the timber deck. Mixer needs to sit on timber deck.

Stone or benchtop surface cut out should be 46-52mm to ensure mixer flange covers the hole after assembly.

A maximum of 40mm thickness in total of both Benchtop and Timber to allow cover flange and spacer to fit mixer body.

450mm flexible inlet hoses are supplied

Recommended clearances indicated Fig B.

Hob Progressive Mixer with spacer will on page 5

Hob Progressive Mixer

Without Spacer

1. Insert mixer assembly into benchtop.
   Ensure that mixer seal is seated flush onto timber deck.

2. Slide the rubber washer, then the steel washer over the mixer tail. Secure them with the screw lock

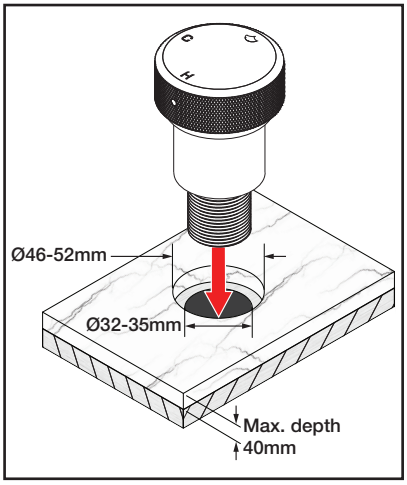

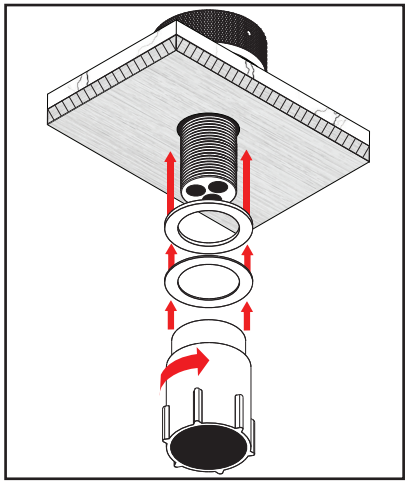

3. Before installing 450mm flexible inlet hoses, apply lubricant to the O-rings. Insert 'Hot' and 'Cold' inlet hoses into corresponding connections on underside of the mixer tail (Fig B) and hand-tighten until reaching a mechanical rest.

   Insert the outlet hose into the remaining connection on mixer tail. Hand-tighten. **Do not tighten with tools during this step.**

   Hand-tighten connectors with the gasket seal (nut) to corresponding mains water supply, and the outlet hose to the remote outlet. Apply 1/4 turn using appropriate wrench to all connectors.

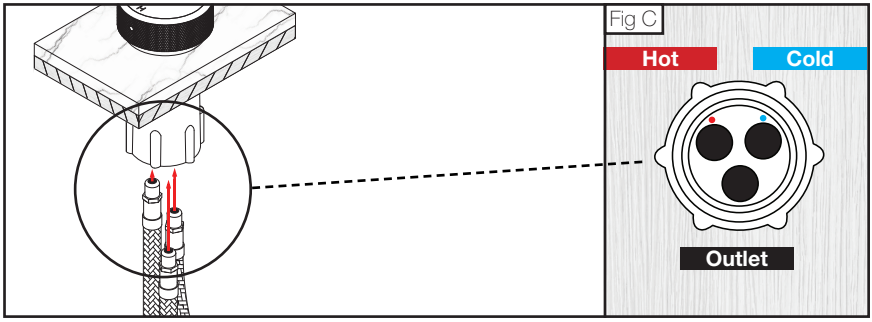

Hob Progressive Mixer

With Spacer

1. Insert mixer assembly into benchtop.
   Ensure that mixer seal is seated flush onto timber deck.

2. Slide the spacer, rubber washer, then the steel washer over the mixer tail. Secure them with the screw lock

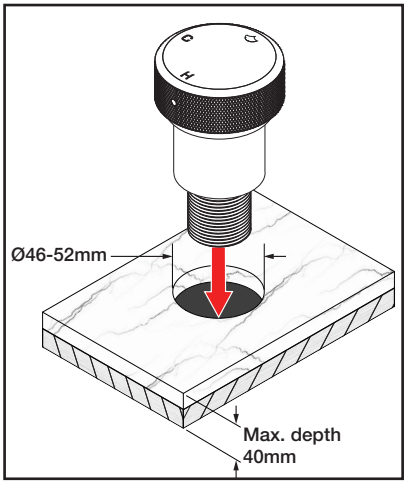

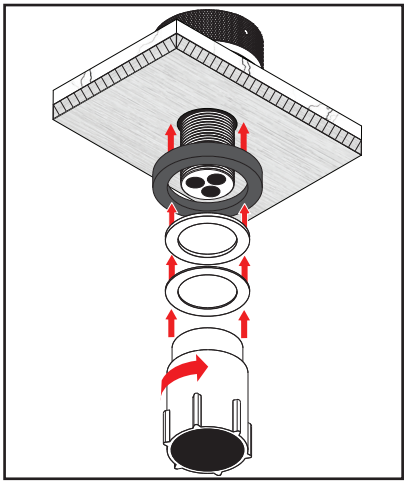

3. Before installing 450mm flexible inlet hoses, apply lubricant to the O-rings. Insert ‘Hot’ and ‘Cold’ inlet hoses into corresponding connections on underside of the mixer tail (Fig B) and hand-tighten until reaching a mechanical rest.

   Insert the outlet hose into the remaining connection on mixer tail. Hand-tighten. **Do not tighten with tools during this step.**

   Hand-tighten connectors with the gasket seal (nut) to corresponding mains water supply, and the outlet hose to the remote outlet. Apply 1/4 turn using appropriate wrench to all connectors.

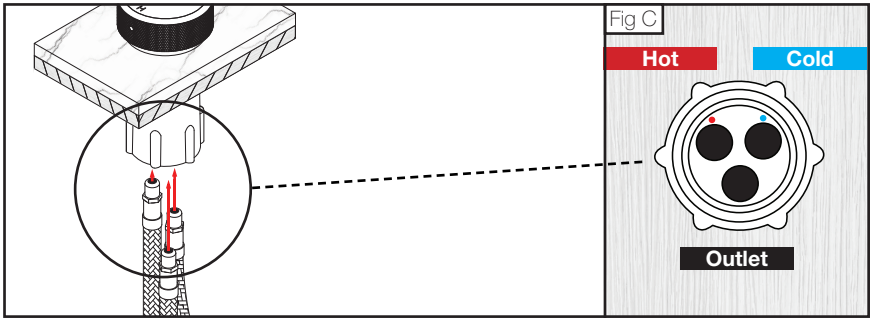

Hob Mixer Sets

1. Hob Outlet
2. Plastic Washer
3. Plastic Nut
4. Hob Progressive Mixer

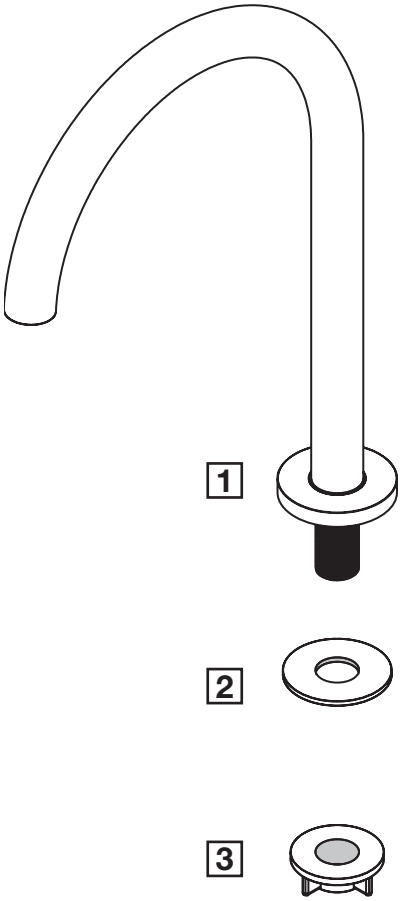

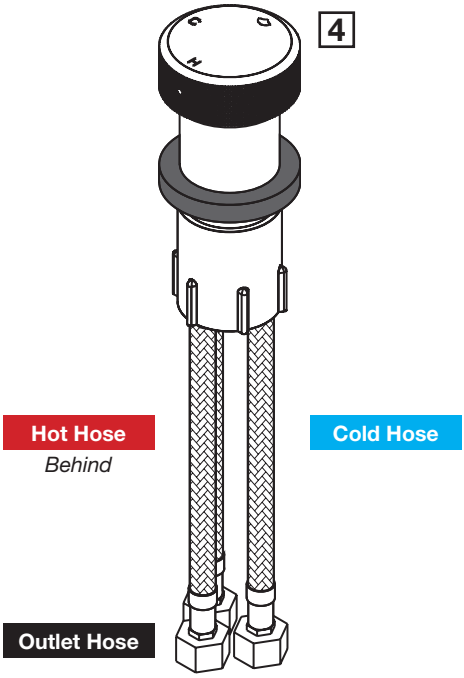

Hob Mixer Sets

1. Before installing the Hob Mixer Sets, ensure the Hob Mixer (4) is already assembled from page 4 or 5

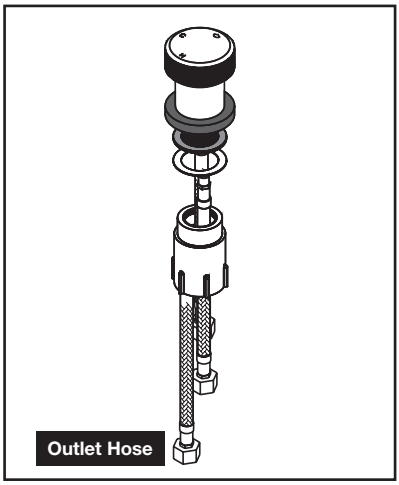

2. Place the hob outlet (1) into position. Align the plastic washer (2) below the outlet hole of the benchtop surface. Tighten the plastic nut (3) firmly

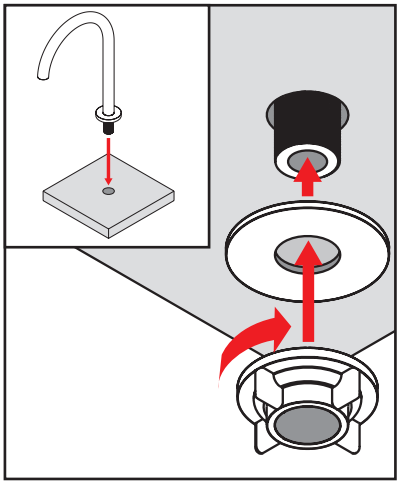

3. Screw the outlet hose into the male thread of the outlet. After installation ensure the mixer and outlet are secured firmly and there are no sign of leakage

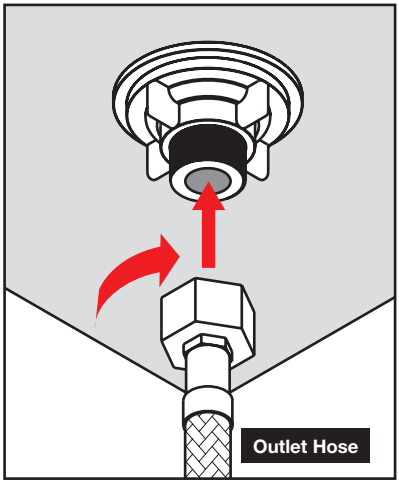

Hob Mixer Pull Out Sets

1. Hob Pull Out Outlet
2. Brass Mount Assembly
3. Pull Out Hose
4. Hob Progressive Mixer

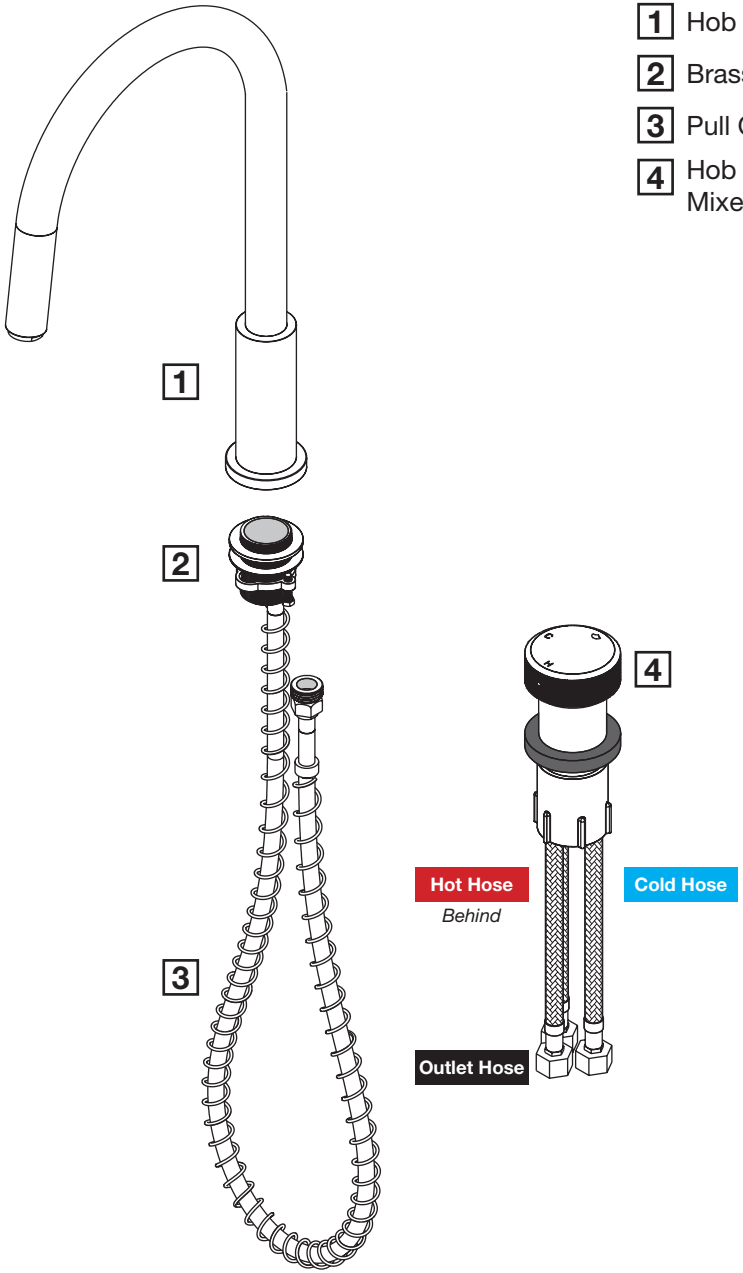

Hob Mixer Pull Out Sets

1. Before installing the Hob Mixer Sets, ensure the Hob Mixer (4) is already assembled from page 4 or 5

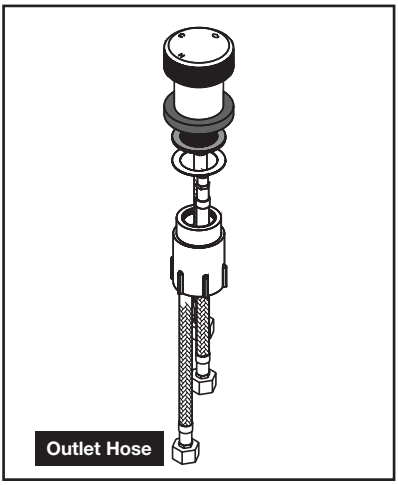

2. Ensure the cutout for Hob Pull Out Outlet (1) is 35mm in diameter

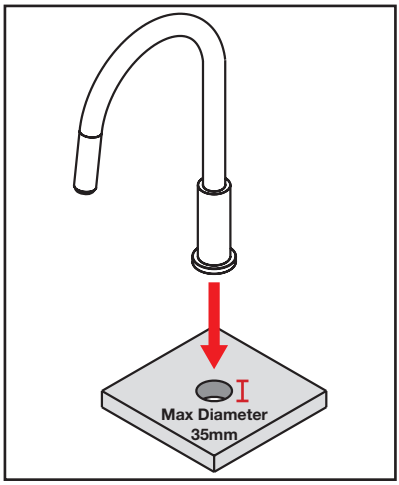

3. Place the hob pull out outlet (1) into position. Align the brass mount (2) below the outlet hole of the benchtop surface and tighten the assembly firmly

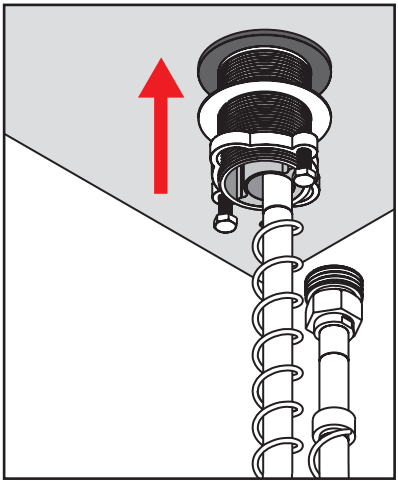

4. Screw the outlet hose into the end of the pull out hose (3). After installation ensure the mixer and outlet are secured firmly and there are no sign of leakage

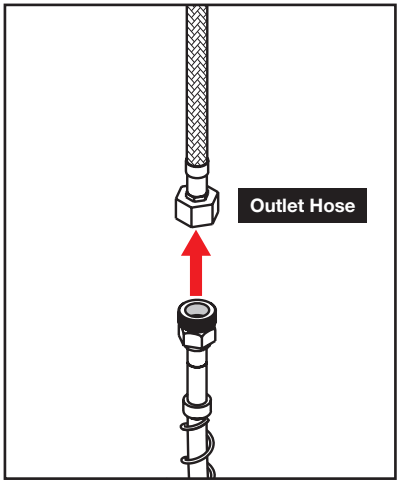

This page is left intentionally blank

This page is left intentionally blank

PAR
TAPS

www.partaps.com

/ParTapsPtyLtd

@par_taps