PAR
TAPS

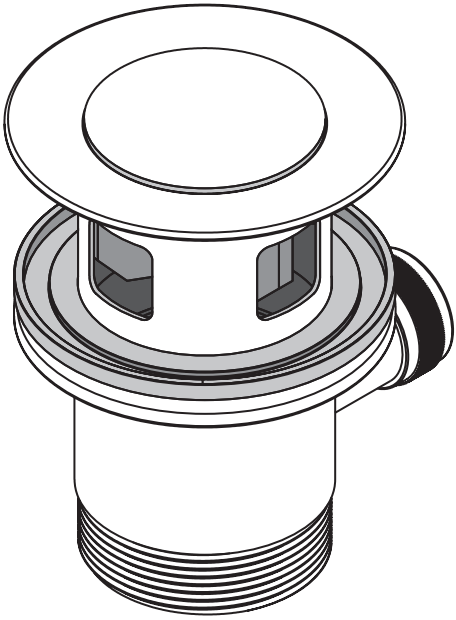

# Pop-Up Bidet Waste

Installation Guide

Ver 26.1

# Important Information

**Prior to Installation:**

- Please read these instructions completely.
- All instructions serve as a guide only and must be installed by a licensed plumber in accordance with AS/NZS 3500.1. Installation carried out by unlicensed individuals will void all warranties.
- Supply lines must be flushed prior to installation to remove any foreign matter.
- All products are suitable for use with most instantaneous hot water heaters, however are not compatible with gravity-fed water systems.

# Pop Up Bidet Waste

1. Waste Body
2. Rubber Washer
3. Waste Base
4. Ball Joint Parts
5. Operating Rod
6. Control Rod
7. L Shaped Connector
8. Control Rod Extender

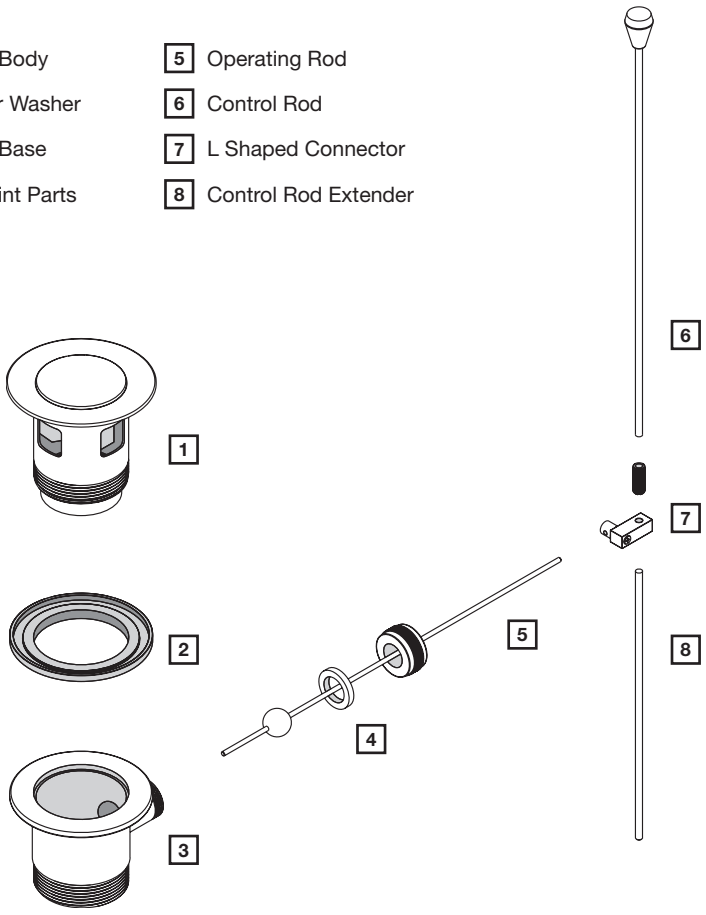

1. Disassemble the pop-up waste and apply a sealant to both faces of the Rubber Washer (1)

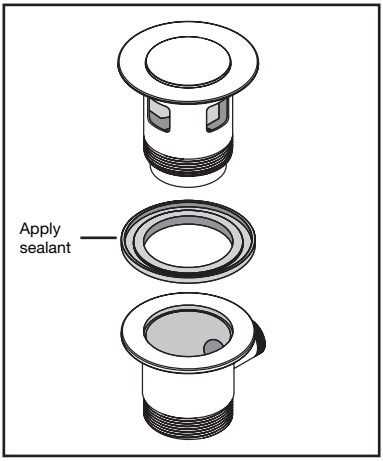


2. Reassemble the pop-up waste onto the basin bowl by fitting in Waste Body (1) and Rubber Washer (2) and then screw on the Waste Base (3)

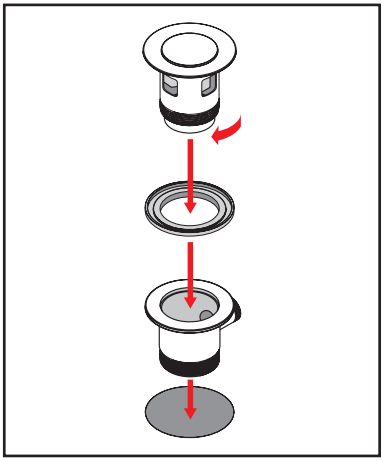

3. Slide the Operting Rod (5) on the Waste Base (3). Then fit in the Ball Joint Parts (4) and tighten firmly to close it. Insert the Control Extender (8) to the L Shaped Connector (7). Then screw in and connect to the Control Rod (6) to enable the pop-up action

Plug height can be set by adjusting the Operating (5) and Control Rod (6)

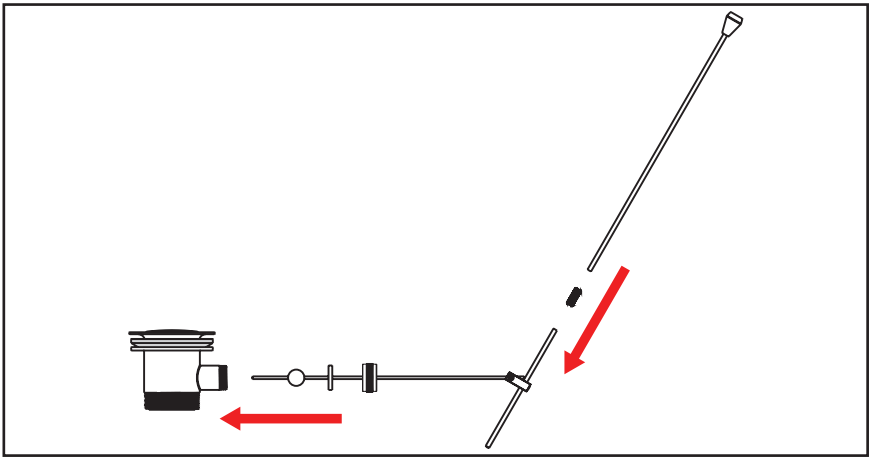



PAR

TAPS



www.partaps.com



/ParTapsPtyLtd



@par_taps