PAR
TAPS

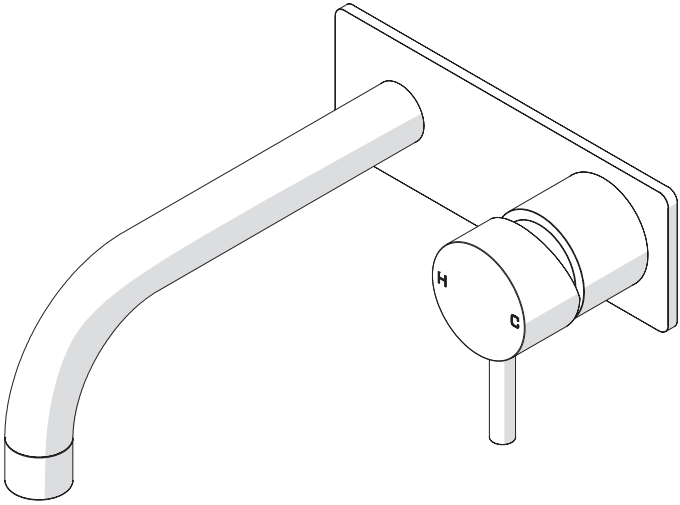

Wall Mixers on Plate

Installation Guide

Ver 26.2

Important Information

Prior to Installation:

- Please read these instructions completely.
- All instructions serve as a guide only and must be installed by a licensed plumber in accordance with AS/NZS 3500.1. Installation carried out by unlicensed individuals will void all warranties.
- Supply lines must be flushed prior to installation to remove any foreign matter.
- All products are suitable for use with most instantaneous hot water heaters, however are not compatible with gravity-fed water systems.

Water Pressure & Temperature:

This Par Taps products are to be installed by a Licensed Plumber in accordance with AS/NZS 3500.1

Maximum Water Temperature — — — — — — — — — — — 65° Celsius

Regulatory Maximum Water Pressure — — — — — — — — — 500kPa

Note: In areas where the recommended maximum water pressure is exceeded, pressure-limiting valves must be installed.

Wall Mixer on Plate

For Lugano, Lava, Fuze, Tudor

1. Basin / Bath Outlet
2. Mixer Handle with Grub Screw
3. Backplate
4. 1/2 inch Outlet Thread
5. Mixer Sleeve
6. Wall Breech
7. Mixer Body

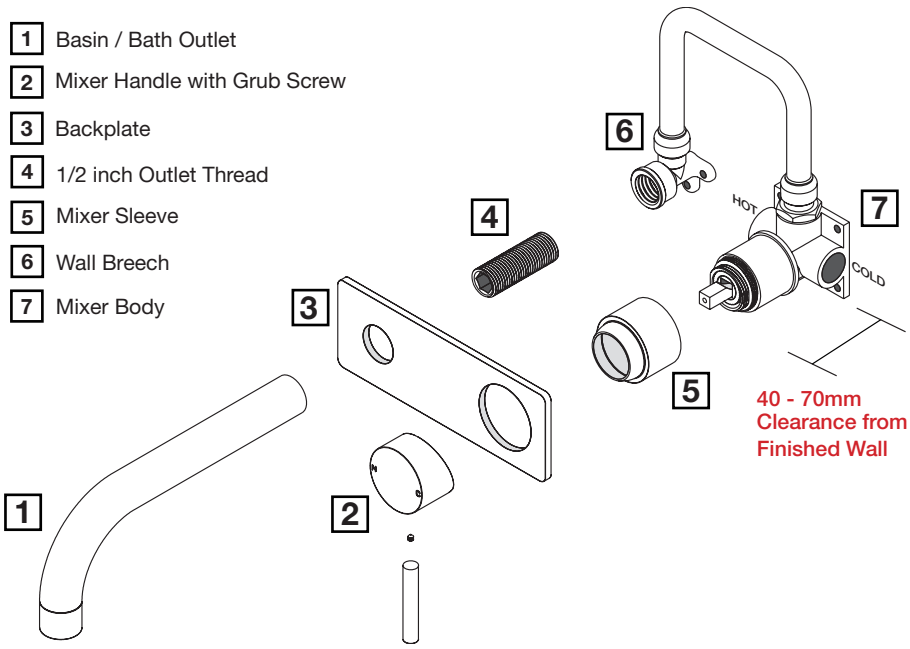

Product Depictions in this Guide

For illustrative purposes, Lugano products have been featured in this guide. There will be variations in appearance between this guide and products ranges, but installation remains identical.

New Innovation Mixer on Plate breech

Par Taps designed. This breech allows you to select which side you would like your outlet on.

NOTE: Most applications, the outlet is on the left of the wall mixer.

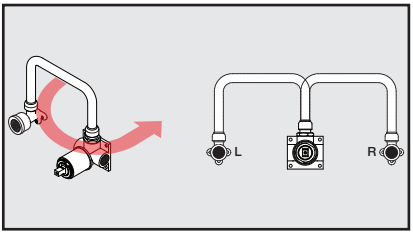

Note: Please ensure that the noggin depth behind the face of the wall is within specification

(40mm to 70mm from Finished Wall, See Left)

Fit- off

Prior to installation of Wall mixer on plate, measure the **center-to-center** distance between Mixer Body and Outlet nipple in the following ranges...

Lugano, Lava, Fuze:
110mm

Tudor :
105mm

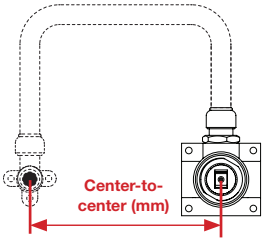

Note: Please ensure center of outlet and center of mixer cartridge are level.

1. Fit the Wall Breech (6) to the noggin. Use a spirit-level to ensure the body is straight.

Please insert the Mixer Sleeve (5) in to the Mixer Body (7) and tighten the grub screw to secure

Cap off and test for any leaks.

<u>Finish tiled wall before next step</u>

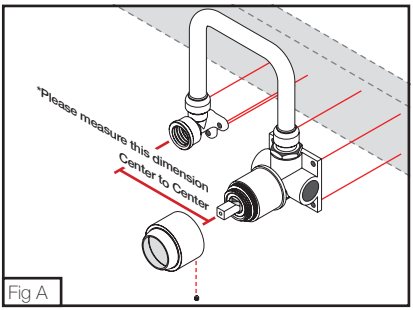

Fig A

2. Fit the 1/2 Inch Outlet Thread (4) into the Wall Breech (6). Ensure a thread sealer has been applied and tighten with a 12mm Allen Key.

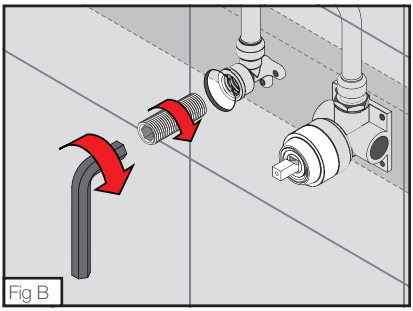
Fig B

3. Slide the Backplate (3) over the assembly until flush with wall surface.

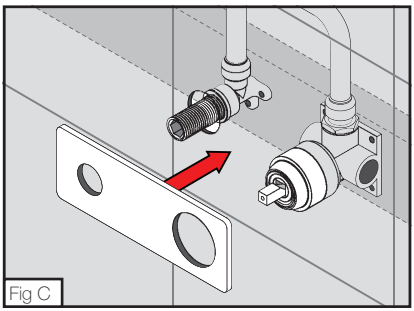
Fig C

4. Screw the Outlet (1) onto the 1/2 inch Outlet Thread (4).

Fit the Mixer Handle (2) to the main body by firmly pushing it onto the mixer cartridge.

Tighten all the grub screws on the handle to secure. Installation Complete!

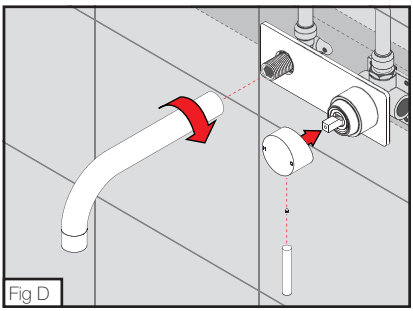
Fig D

Wall Mixer on Plate

For Sol, IDK, IDK Marble

1. Basin / Bath Outlet
2. Mixer Handle with Grub Screw
3. Backplate
4. 1/2 inch Outlet Thread
5. Mixer Sleeve
6. Wall Breech
7. Mixer Body

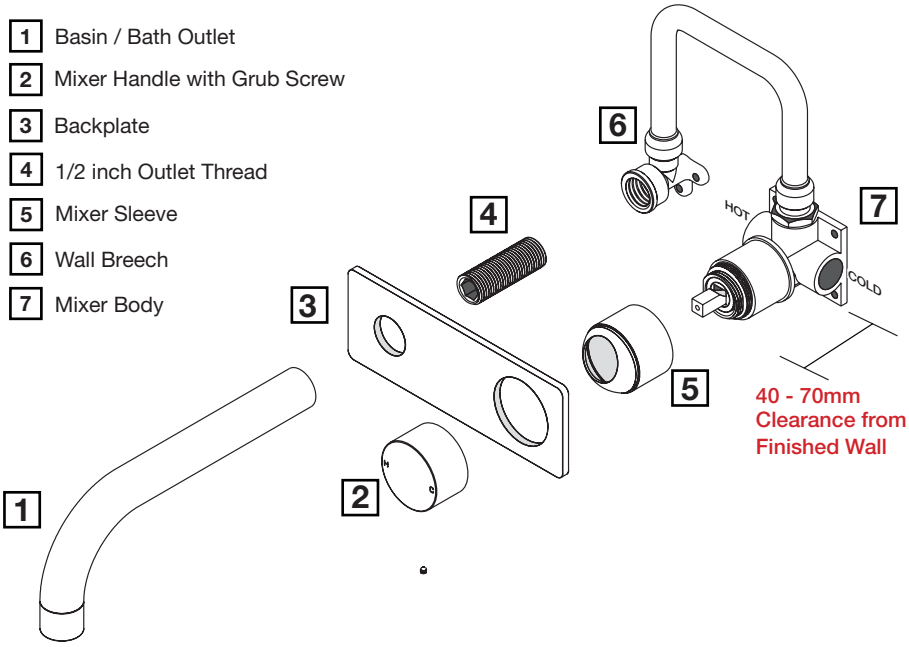

New Innovation Mixer on Plate breech

Par Taps designed. This breech allows you to select which side you would like your outlet on.

NOTE: Most applications, the outlet is on the left of the wall mixer.

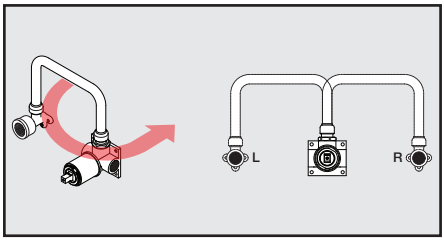

Note: Please ensure that the noggin depth behind the face of the wall is within specification, (40mm to 70mm from Finished Wall, See above Drawing)

Fit- off

Prior to installation of Wall mixer on plate, measure the **center-to-center** distance between Mixer Body and Outlet nipple to **110mm** (adjust if necessary).

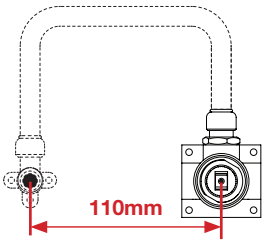

Note: Please ensure center of outlet and center of mixer cartridge are level.

Product Depictions in this Guide

For illustrative purposes, Sol products have been featured in this guide. There will be variations in appearance between this guide and products ranges, but installation remains identical.

1. Fit the Wall Breech (6) to the noggin. Use a spirit-level to ensure the body is straight.

Please insert the Mixer Sleeve (5) in to the Mixer Body (7) and tighten the grub screw to secure

Ensure Sleeve (5) is aligned central to the Mixer Body (Fig 1)

Cap off and test for any leaks. **Finish tiled wall before next step**

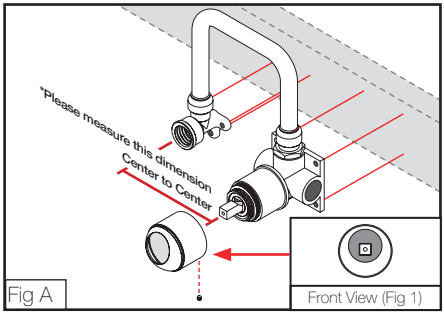

Fig A

2. Fit the 1/2 Inch Outlet Thread (4) into the Wall Breech (6). Ensure a thread sealer has been applied and tighten with a 12mm Allen Key.

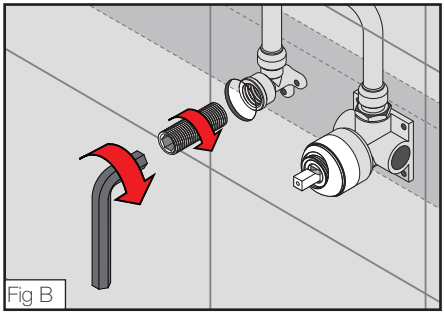
Fig B

3. Slide the Backplate (3) over the assembly until flush with wall surface.

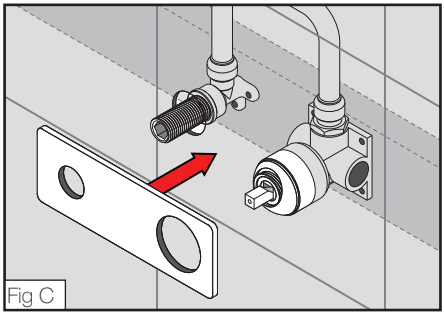
Fig C

4. Screw the Outlet (1) onto the 1/2 Inch Outlet Thread (4).

Fit the Mixer Handle (2) to the main body by firmly pushing it onto the mixer cartridge.

Tighten all the grub screws on the handle to secure. Installation Complete!

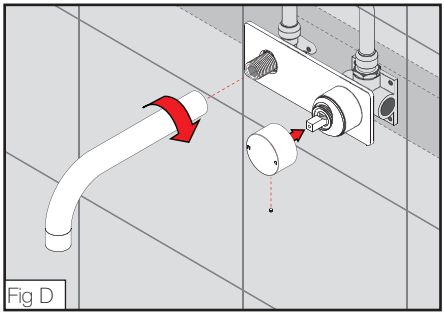
Fig D

IDK - IDK Marble - Sol
Standard Mixer Operation

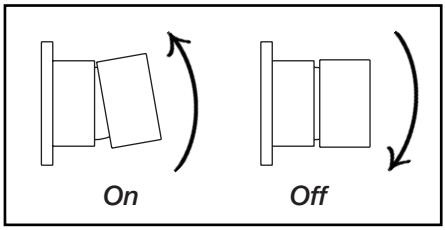

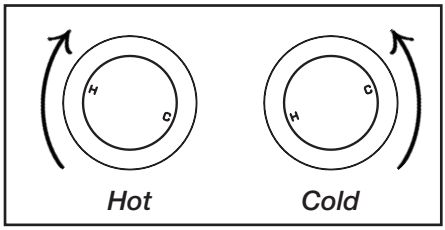

Wall Mixer on Plate

For Burj

1. Basin / Bath Outlet Grub Screw
2. Mixer Handle with Grub Screw
3. Backplate
4. Push-Fit Outlet Nipple
5. Mixer Sleeve Grub Screw
6. 1/2 inch Outlet Thread
7. Wall Breech
8. Mixer Body

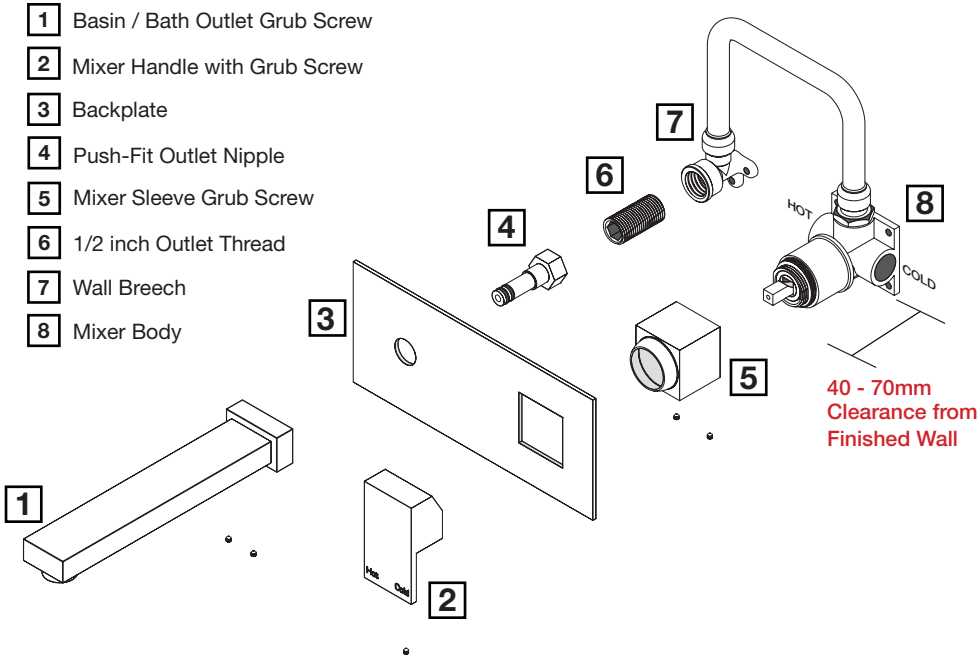

New Innovation Mixer on Plate breech

Par Taps designed. This breech allows you to select which side you would like your outlet on.

NOTE: Most applications, the outlet is on the left of the wall mixer.

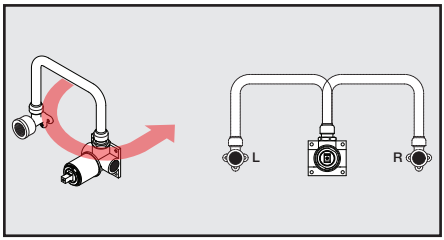

Note: Please ensure that the noggin depth behind the face of the wall is within specification, (40mm to 70mm from Finished Wall, See above Drawing)

Fit- off

Prior to installation of Wall mixer on plate, measure the **center-to-center** distance between Mixer Body and Outlet nipple to **130mm** (adjust if necessary).

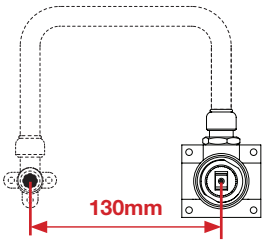

Note: Please ensure center of outlet and center of mixer cartridge are level.

1. Fit the Wall Breech (7) to the noggin. Use a spirit-level to ensure the body is straight.

Please insert the Mixer Sleeve (5) in to the Mixer Body (8) and tighten the grub screw to secure

Cap off and test for any leaks. **Finish tiled wall before next step**

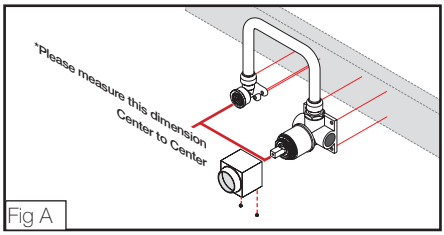

Fig A

2. For correct fitment, please ensure that the 1/2 Inch Outlet Thread (6) is cut either to the face of the finished wall or up to 5mm behind the finished wall.

NIPPLE CANNOT SIT PROUD

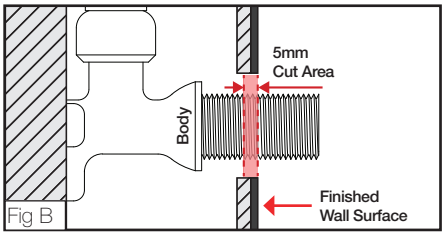

Fig B

3. Cut the **non-hex** end of the thread to enable ease of fitment.

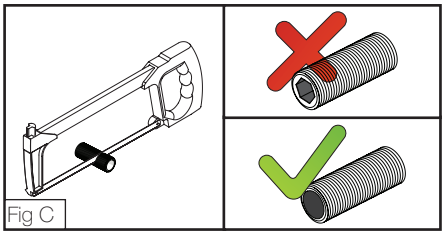
Fig C

4. Fit the 1/2 Inch Outlet Thread (6) into the Wall Breech (7). Ensure a thread sealer has been applied and tighten with a 12mm Allen Key.

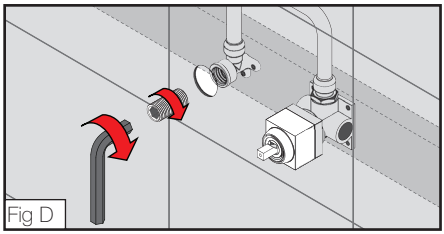
Fig D

5. Screw the Push-Fit Outlet Nipple (4) onto the 1/2 Inch Thread (6). Tighten with a spanner.

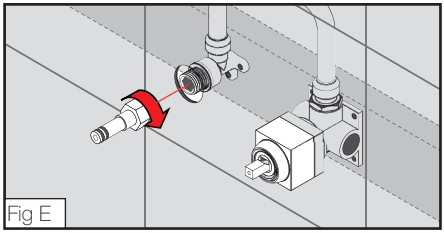
Fig E

6. Slide the Backplate (3) over the assembly until flush with wall surface.

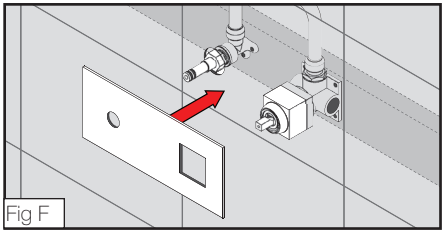
Fig F

7. Push-fit the Outlet (1), ensure it is firmly pushed onto the nipple and use the locator pin to align the outlet.

Fit the Mixer Handle (2) to the main body by firmly pushing it onto the mixer cartridge.

Tighten all the grub screws for the outlet and handle to secure. Installation Complete!

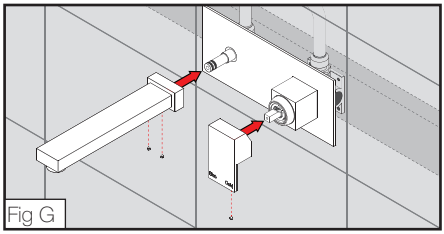
Fig G

PAR
TAPS

www.partaps.com

/ParTapsPtyLtd

@par_taps